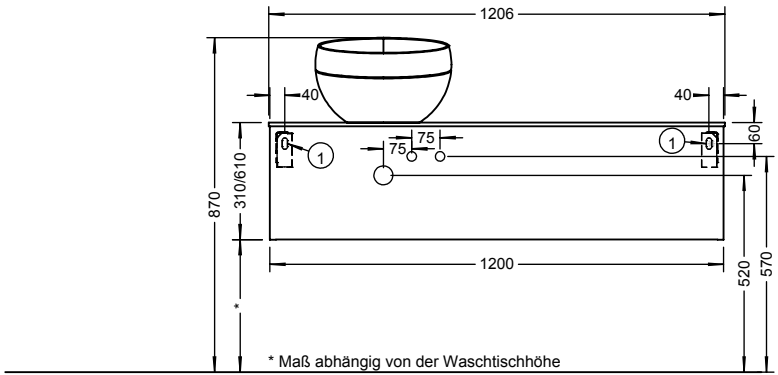

SFNZ120/12T
SFOA120/12T